MicroLoc®

5 Axis Workholding Systems

52/96 Manual Zero Point
77/125 Self Centering Vices

52/96
Industry
Standard

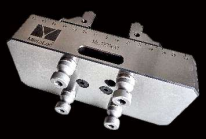

Compatible with
other well known
brands

Hardened &
Ground

British Made

More
competitive
than German
Brands

Repeatability less
than 0.01mm

Designed and manufactured in the UK by Micron Workholding

MicroLoc is a registered trademark of Micron Workholding Ltd

MicroLoc®

www.**microloc**.com

Tel: **+44 (0)1480 861321**

5 Axis Workholding Systems

77mm Wide Self Centering Vices

Zero Point Base fit - 52mm Pitch

1. The Plain Smooth Surface of the Jaws can be used for Clamping Workpieces without marking.
2. Double Guide Long Stroke with screw nut Vice drive Jaw
3. Base structure is stable and durable, but also light and easy for manual Loading and unloading
4. The Upper End of the Jaw has Gripper Teeth on both sides to bite in and reliably Clamp on only 3mm!
5. Supplied with 16mm Plugs at 52mm Pitch to sit on Manual Zero Point System

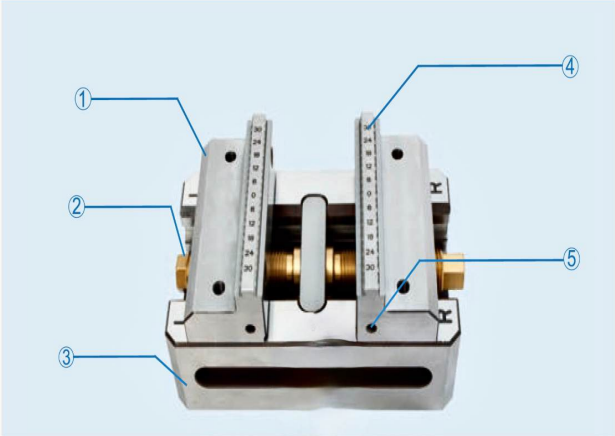

MicroLoc 77 Vice

ML-110286- 5Axis Vice - 130 x 77mm

Repeatability less than 0.01mm

Maximum Workpiece Length of 110mm

Maximum Clamping Force 14,000 N / Driving Torque 70 Nm

Supplied with 4 off 16mm Zero Point Plugs to fit 52mm Pitch (ML-110164)

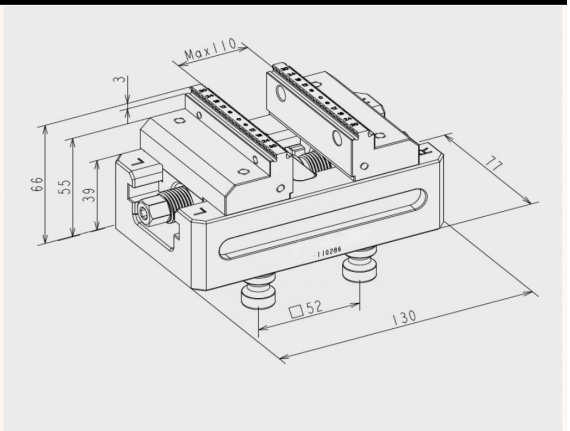

ML-110160- 5Axis Vice - 170 x 77mm

Repeatability less than 0.01mm

Maximum Workpiece Length of 160mm

Maximum Clamping Force 14,000 N / Driving Torque 70 Nm

Supplied with 4 off 16mm Zero Point Plugs to fit 52mm Pitch (ML-110164)

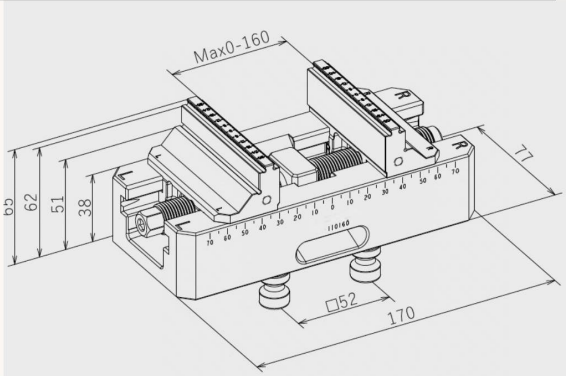

5 Axis Workholding Systems

77mm Wide Self Centering Vices

Zero Point Base fit - 52mm Pitch

MicroLoc 125 Vice

ML-110185- 5Axis Vice - 160 x 125mm

Repeatability less than 0.02mm

Maximum Workpiece Length of 155mm

Maximum Clamping Force 20,000 N / Driving Torque 100 Nm

Supplied with 4 off 20mm Zero Point Plugs to fit 96mm Pitch (ML-110194)

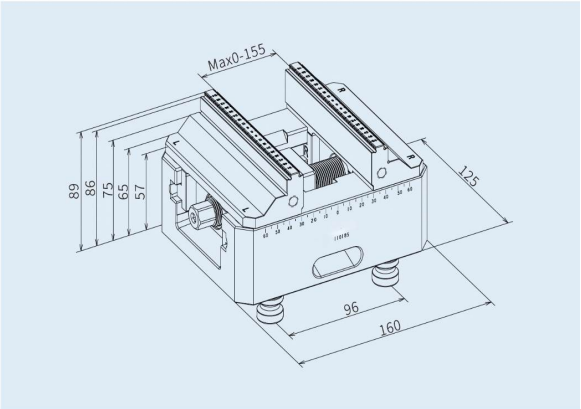

ML-110186- 5Axis Vice - 210 x 125mm

Repeatability less than 0.02mm

Maximum Workpiece Length of 205mm

Maximum Clamping Force 20,000 N / Driving Torque 100 Nm

Supplied with 4 off 20mm Zero Point Plugs to fit 96mm Pitch (ML-110194)

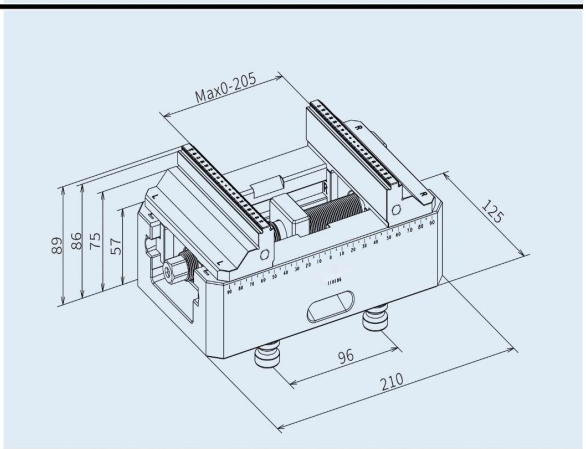

ML-110187- 5Axis Vice - 260 x 125mm

Repeatability less than 0.02mm

Maximum Workpiece Length of 255mm

Maximum Clamping Force 20,000 N / Driving Torque 100 Nm

Supplied with 4 off 20mm Zero Point Plugs to fit 96mm Pitch (ML-110194)

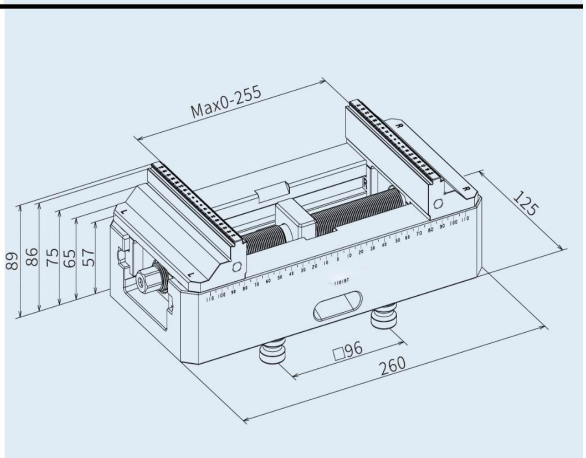

5 Axis Workholding Systems

5 Axis Vices & Accessories

MicroLoc 125 Soft Vice

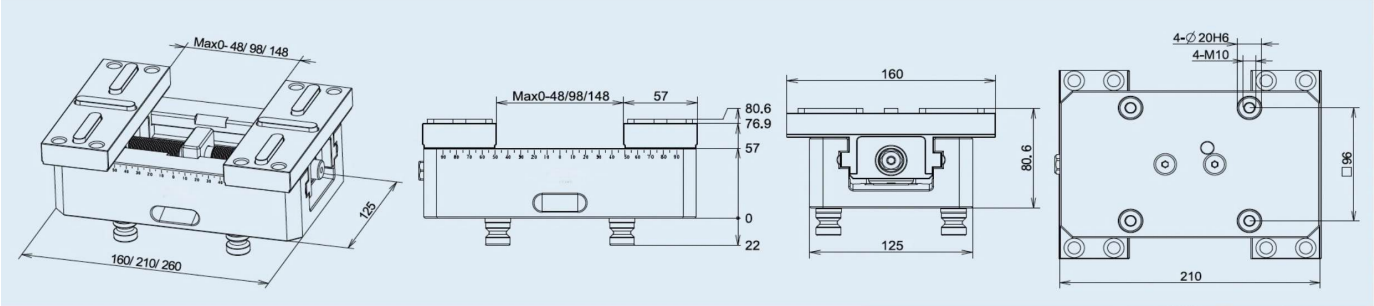

Model No.	Base Length	Clamping Range	Max Driving Torque
ML-110185	160mm	0-48mm	100Nm
ML-110186	210mm	0-98mm	100Nm
ML-110187	260mm	0-148mm	100Nm

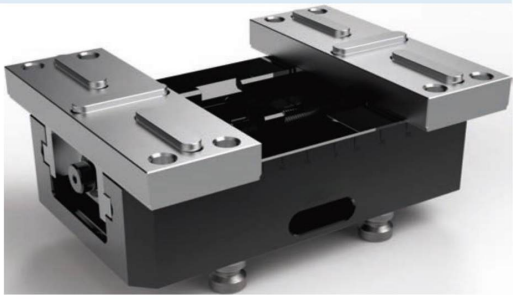

ML-110150- Single Vice Riser Base

For use with Standard 5 Axis Vice ML-110286

wth 4 x M10 Mounting Holes

Can be customised to suit 5 Axis Pallet/machine Table

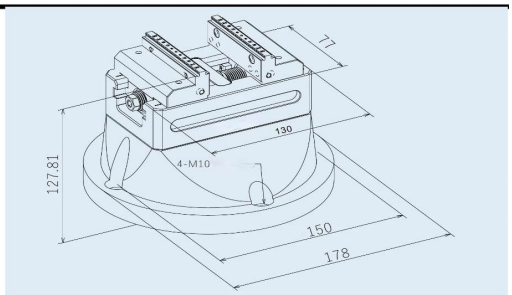

Jaws (Left Jaw + Right Jaw)

ML-110060 for use with Standard 5 Axis Vice ML-110286

ML-110185 for use with ML-110185/ ML-110186 & ML-110187

Jaw Width	Model No.	Weight	Unit
77mm	ML-110160-02 Left	0.8kg	1 set
	ML-110160-03 Right		
125mm	ML-110185-02 Left	2.6kg	1 set
	ML-110185-03 Right		

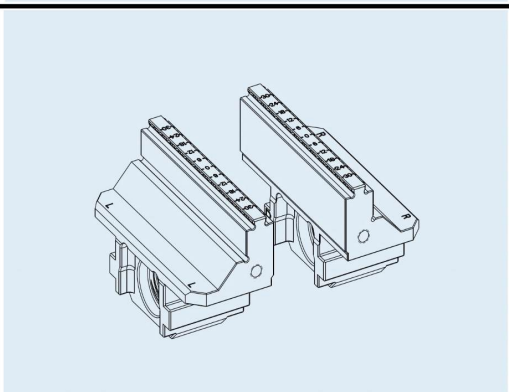

5 Axis Workholding Systems

5 Axis Vice Accessories

MicroLoc 77/125

ML-110193 - Cross Tenon Soft Jaw Base

For use with Standard 5 Axis Vice ML-110286

ML-110193-01 Left Jaw, ML-110193-02 Right Jaw

160x57mm weight 4.3kg

For use with ML-110185 / ML-110186 / ML-110187

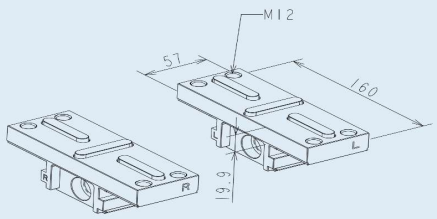

Operating Screw & Centering Base Set

For use with Standard 5 Axis Vice ML-110160, ML110185, ML-110186 & ML-110187

Model No.	Screw length	Assembly	Weight	Unit
ML-110160-04	169mm	ML-110160	0.3kg	1 set
ML-110160-05				
ML-110160-06				
ML-110185-04	164mm	ML-110185	0.7kg	1 set
ML-110185-04				
ML-110185-04				
ML-110186-04	214mm	ML-110186	0.7kg	1 set
ML-110186-04				
ML-110186-04				
ML-110187-04	264mm	ML-110187	0.9kg	1 set
ML-110187-04				
ML-110187-04				

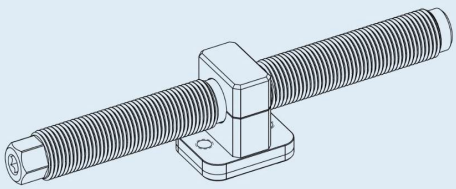

Centre Jaw with Screw Set

For use with Standard 5 Axis Vice ML-110185/ML-110186/ ML-110187

Model No.	Screw length	Assembly	Weight	Unit
ML-110160-04	169mm	ML-110160	0.3kg	1 set
ML-110160-05				
ML-110160-06				
ML-110185-04	164mm	ML-110185	0.7kg	1 set
ML-110185-04				
ML-110185-04				
ML-110186-04	214mm	ML-110186	0.7kg	1 set
ML-110186-04				
ML-110186-04				
ML-110187-04	264mm	ML-110187	0.9kg	1 set
ML-110187-04				
ML-110187-04				

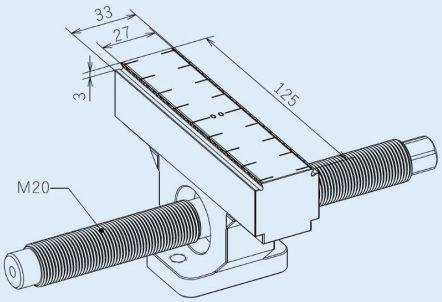

5 Axis Workholding Systems
52mm Pitched Manual
Zero Point Bases

MicroLoc 52

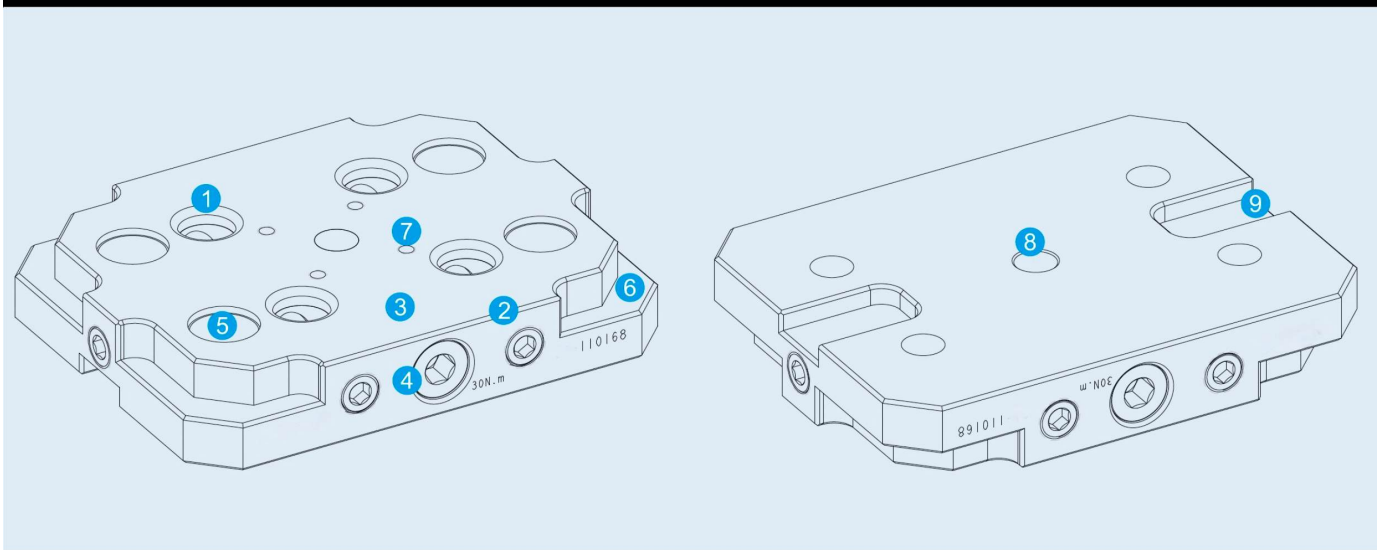

1. Centre distance is 52mm, Torque is 30nm, suitable fo ø16mm Plugs and used with 77mm Vice Jaw width
2. Zero Point Base thickness 27mm
3. Solid Fixture body, surface Ground after Heat Treatment, solid wear-resistant structure and durable
4. Strong mechanical tension is achieved by tightening screw for quick locking and quick release
5. Mounting Hole Positions
6. Machined away for more clearance
7. 4 x M5 Tapped Holes as positional aid of Clamping devices
8. ø12F5 Bored Hole for location
9. 20H7 Keyway Slot to allow for tenons to locate to machine table /Sub-plate
10. MicroLoc can customise a Sub-plate accurately to suit multiple Clamping

Manual Zero Point Plates

5 Axis Workholding Systems
52mm Pitched Manual
Zero Point Bases

MicroLoc 52

ML-110171 Zero Point 52 Plate ø116

ø116x27mm, use with 16mm Plugs - 2.1kg

Set Up pitch 52mm

Torque 30Nm

No Mounting holes - but can be added

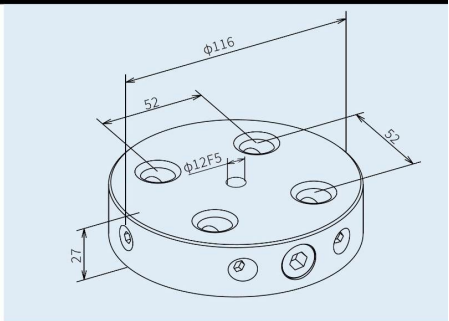

ML-110170 Zero Point 52 Plate ø116

ø116x27mm, use with 16mm Plugs - 2.1kg

Set Up pitch 52mm

Torque 30Nm

96mm Pitch Mounting Holes (Matsuura MX330)

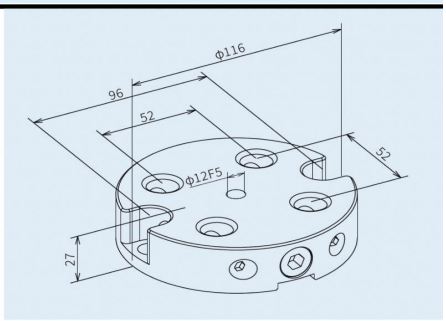

ML-110166 Zero Point 52 Plate 104x104

104x104x27mm use with 16mm Plugs - 2.0kg

Set Up pitch 52mm

Torque 30Nm

No Mounting holes - but can be added

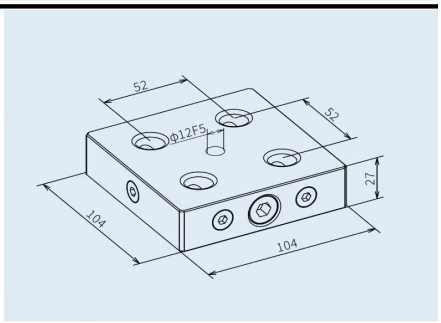

ML-110168 Zero Point 52 Plate 150x116

150x116x27mm use with 16mm Plugs - 3.4kg

Set Up pitch 52mm

Torque 30Nm

Clamping Edges and Mounting Holes

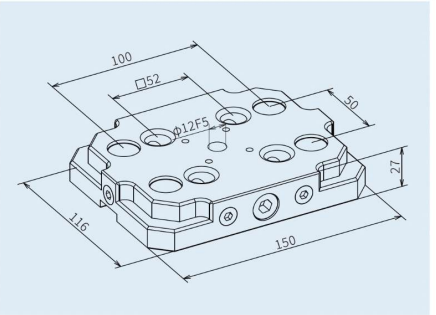

Manual Zero Point Plates

5 Axis Workholding Systems
52mm Pitched Manual
Zero Point Bases

MicroLoc 52

ML-110169 Zero Point 52 Plate 150x116

150x116x27mm, use with 16mm Plugs - 2.1kg

Set Up pitch 52mm

Torque 30Nm

No Mounting holes - but can be added

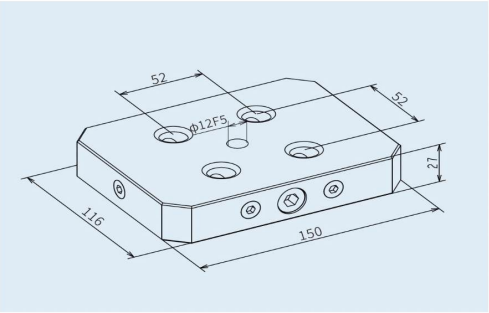

ML-110174 Zero Point 52 Adaptor Plate

150x126x27mm, use with 16mm Plugs - 3.4kg

Set Up pitch 52mm

Torque 30Nm

Adapts 52mm Pitch Base to a 96mm Pitched Base with Plugs

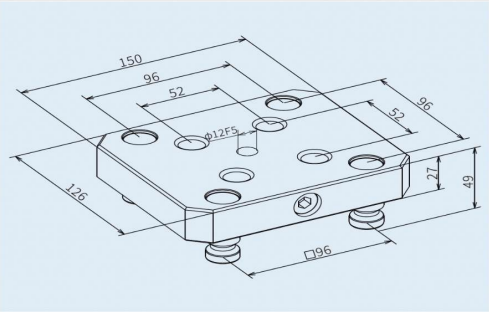

ML-110175 Zero Point 52 Adaptor Plate

ø157x27mm use with 16mm Plugs - 3.7kg

Set Up pitch 52mm

Torque 30Nm

Adapts 52mm Pitch Base to a 96mm Pitched Base with Plugs

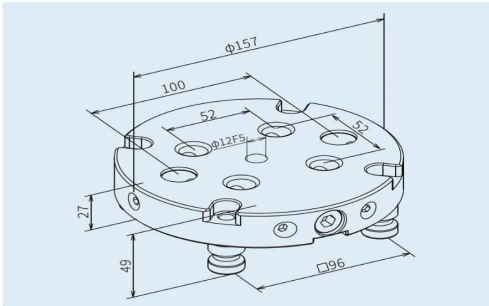

ML-110176 / ML110177 Riser Plate 52

150x116x60mm/ 1150x116x100mm -6mm Plugs - 6.1/10kg

Set Up pitch 52mm

Torque 30Nm

60mm or 100mm Risers

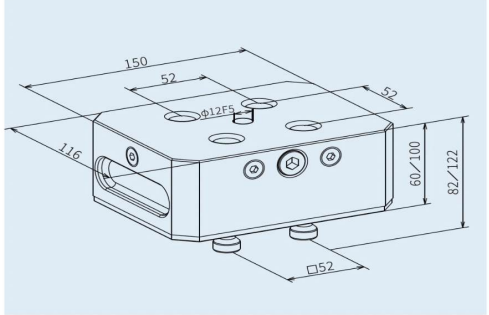

Manual Zero Point Plates

5 Axis Workholding Systems
52mm Pitched Manual
Zero Point Bases

MicroLoc 96

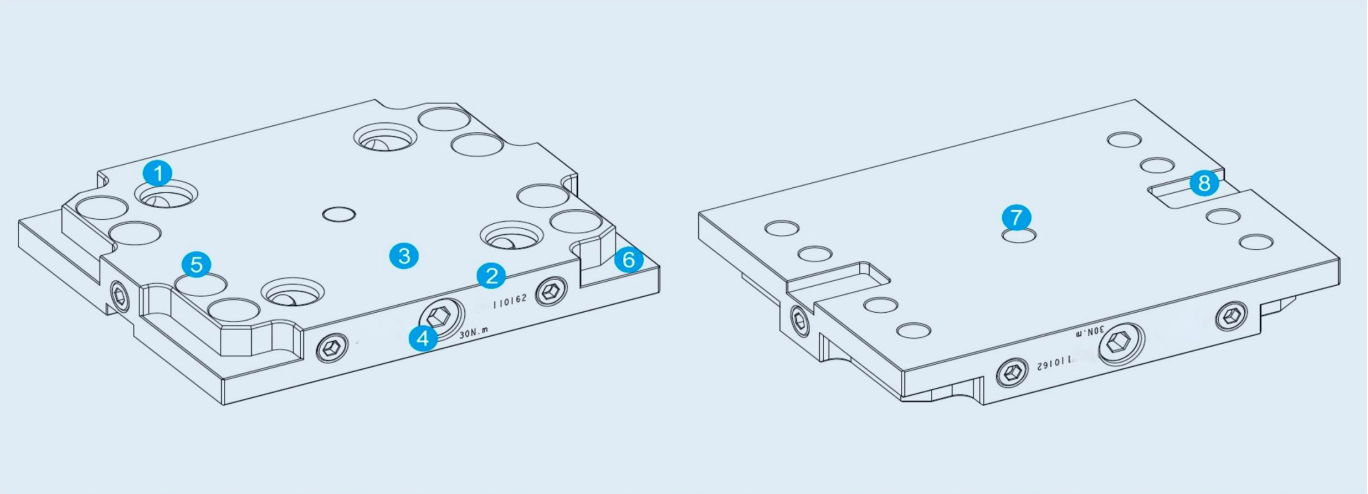

1. Centre distance is 96mm, Torque is 30nm, suitable fo ø20mm Plugs and used with 125mm Vice Jaw width
2. Zero Point Base thickness 27mm
3. Solid Fixture body, surface Ground after Heat Treatment, solid wear-resistant structure and durable
4. Strong mechanical tension is achieved by tightening screw for quick locking and quick release
5. Mounting Hole Positions
6. Machined away for more clearance
7. 4 x M5 Tapped Holes as positional aid of Clamping devices
8. ø12F5 Bored Hole for location
9. 20H7 Keyway Slot to allow for tenons to locate to machine table / Sub-Plate
10. MicroLoc can customise a Sub-plate for you for multiple Clamping use

Manual Zero Point Plates

5 Axis Workholding Systems

96mm Pitched Manual Zero Point Bases

MicroLoc 96

ML-110249 Zero Point 96 Plate ø246x27

ø246x27mm , use with 20mm Plugs - 9.3kg

Set Up pitch 96mm

Torque 30Nm

No Mounting holes - but can be added

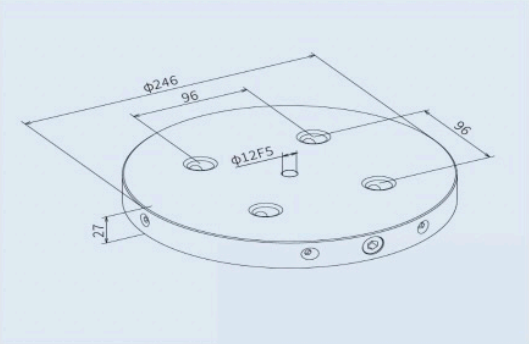

ML-110247 Zero Point 96 Plate ø176x27

ø176x27mm, use with 20mm Plugs - 4.7kg

Set Up pitch 96mm

Torque 30Nm

Mounting Holes for 63mm T-Slot distance on 150mm Pitch

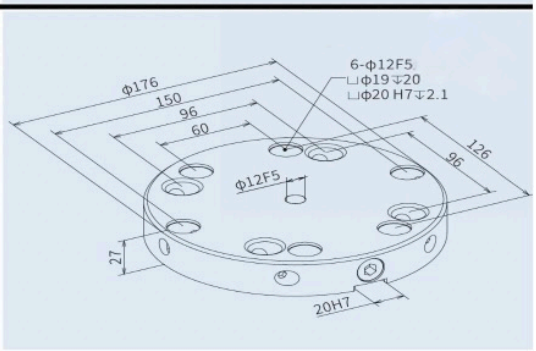

ML-110248 Zero Point 96 Plate ø176x27

ø176x27mm use with 20mm Plugs - 4.8kg

Set Up pitch 96mm

Torque 30Nm

No Mounting holes - but can be added

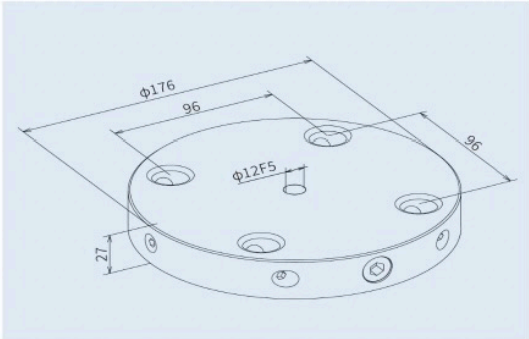

ML-110243 Zero Point Plate 96 ø246x27

ø246x27mm, use with 20mm Plugs - 9.5kg

Set Up Pitch 96mm

Torque 30Nm

Mounting Holes to suit 63mm T-Slot distance on 170mm Pitch

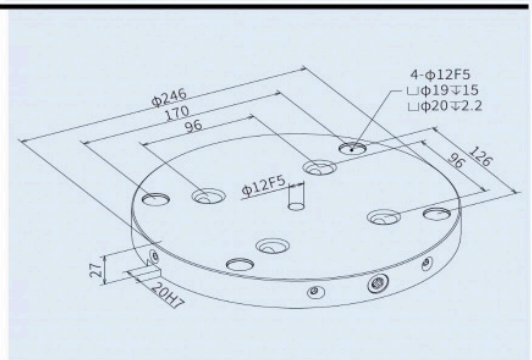

Manual Zero Point Plates

5 Axis Workholding Systems

96mm Pitched Manual Zero Point Bases

MicroLoc 96

ML-110162 Zero Point 96 Plate 192x156

192x156x27mm , use with 20mm Plugs - 5.5kg

Set Up pitch 96mm

Torque 30Nm

Mounting Holes and Clamping Edge

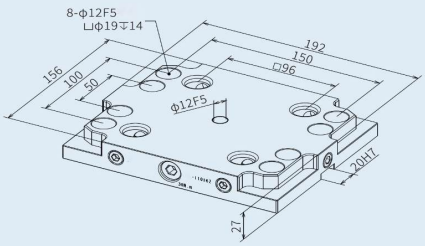

ML-110242 Zero Point 96 Plate 192x192

192x192x27mm, use with 20mm Plugs - 7kg

Set Up pitch 96mm

Torque 30Nm

Mounting Holes for 63mm T-Slot distance on 150mm Pitch

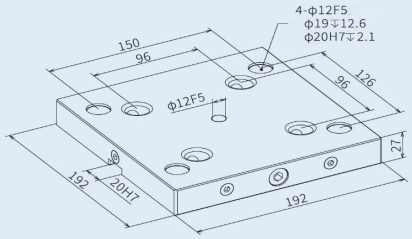

ML-110246 Zero Point 96 Plate 192x156

192x156x27mm use with 20mm Plugs - 6kg

Set Up pitch 96mm

Torque 30Nm

No Mounting holes - but can be added

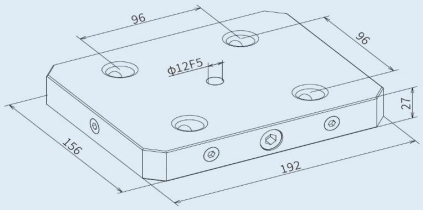

ML-110161 Zero Point Plate 96 192x192

192x192x27mm, use with 20mm Plugs - 7kg

Set Up pitch 96mm

Torque 30Nm

with Mounting Holes at 150mm distance

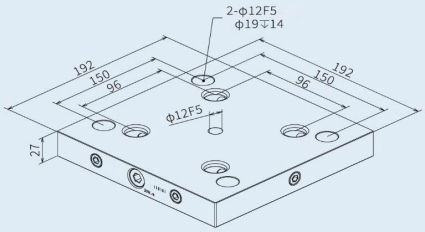

Manual Zero Point Plates

5 Axis Workholding Systems
96mm Pitched Manual
Zero Point Bases

MicroLoc 96

ML-110251 Zero Point 96 Plate 192x192

192x192x27mm , use with 20mm Plugs - 7.2kg

Set Up pitch 96mm

Torque 30Nm

No Mounting holes - but can be added

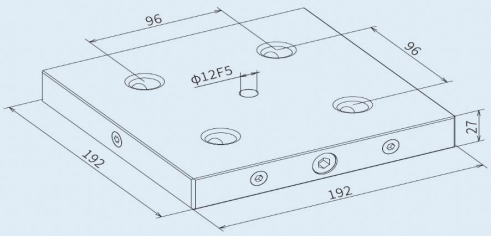

ML-110244 Zero Point 96 Plate 246x192

1246x192x27mm, use with 20mm Plugs - 9.2kg

Set Up pitch 96mm

Torque 30Nm

Mounting Holes for 100mm T-Slot distance on 150mm Pitch

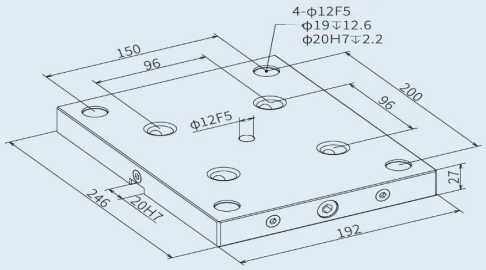

ML-110245 Zero Point 96 Plate 192x156

246x192x27mm use with 20mm Plugs - 9.4kg

Set Up pitch 96mm

Torque 30Nm

No Mounting holes - but can be added

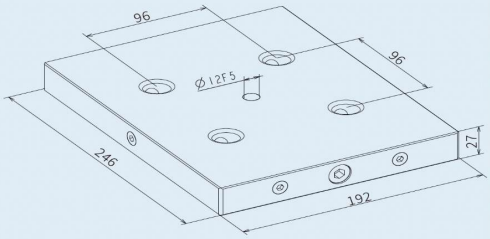

ML-110241 Zero Point Plate 96 Riser

192x156x60mm, use with 20mm Plugs - 11.2kg

Set Up pitch 96mm

Torque 30Nm

60mm Riser Plate

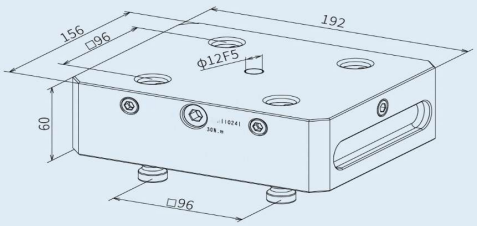

Manual Zero Point Plates

5 Axis Workholding Systems 52/96mm Pitched Plugs and Pyramid

MicroLoc 52/96

ML-110164 Zero Point 52 Plug

16mm Plug , for use with 52mm Pitch System

Inc. M8 Threaded Pin

4 x ML-110164 are required for one 52 Zero Point Plate

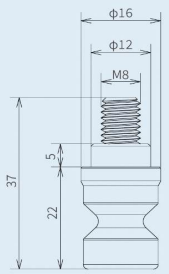

ML-110151 Three Vice Base Pyramid

use with 16mm Plugs

Set Up pitch 52

Suitable for 5 Axis machining, 3 parts at a time

Use with 3 x ML-110165 Sold separately

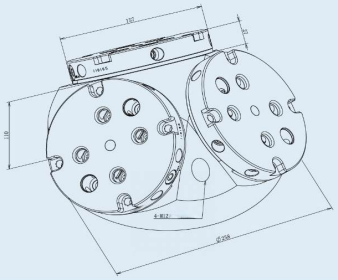

ML-110151 Three Vice Pyramid Assembly

Use with 16mm Plugs

Set Up pitch 952mm

Suitable for 5 Axis Machining,

use with 3 x ML-110165 and 3 x ML-110286

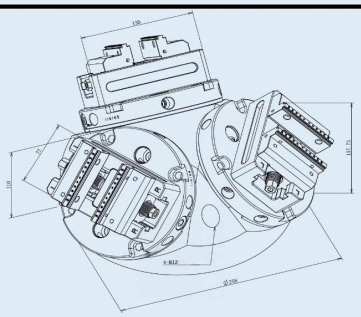

ML-110194 Zero Point 96 Plug

20mm Plug, for use with 96mm Pitch System

inc. M10 Threaded Pin

4 x ML-110194 are required for One 96 Zero Point Plate

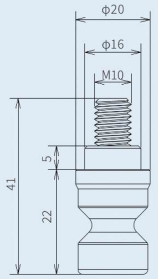

5 Axis Workholding

5 Axis Workholding Systems

77/125 5-Axis Vice

MicroLoc 5 Axis Vices

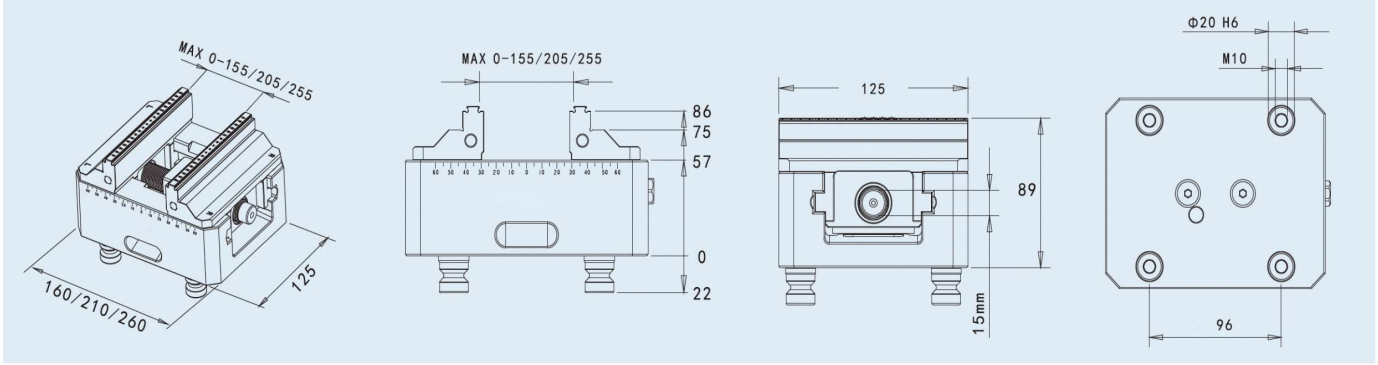

Model No.	Base Length	Clamping Range	Max Torque
ML-110185	160mm	0-155mm	100Nm
ML-110186	210mm	0-205mm	100Nm
ML-110187	260mm	0-255mm	100Nm

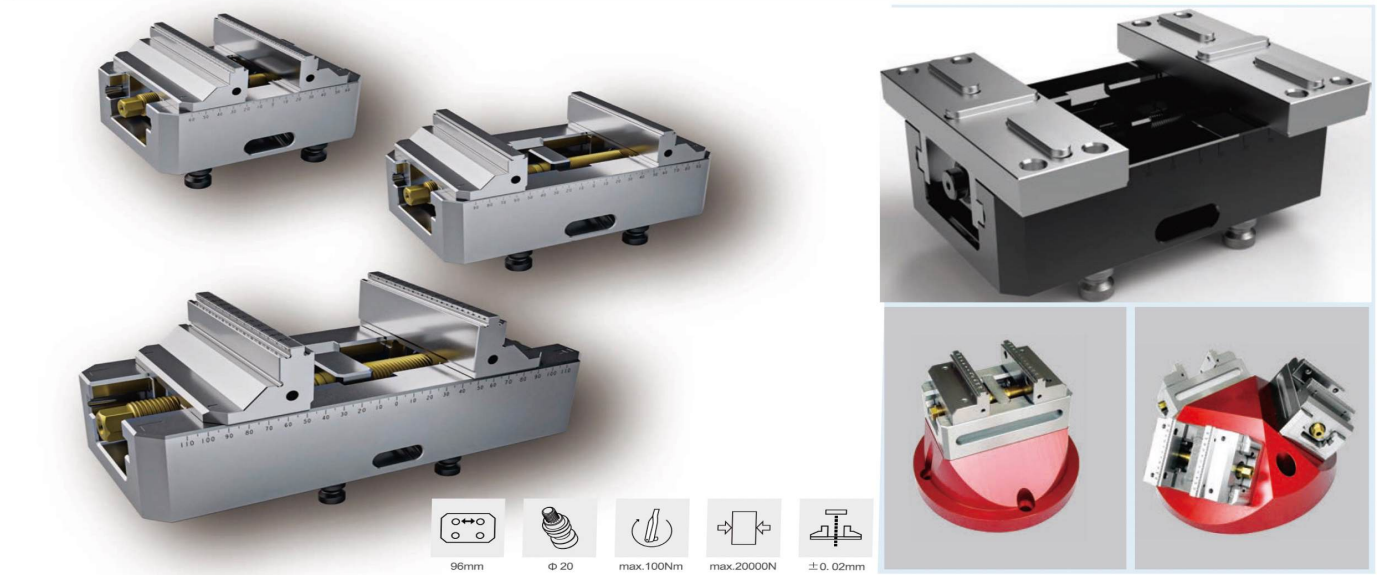

5 Axis Workholding

5 Axis Workholding Systems

52/96 Pitched Manual Zero Point Bases

MicroLoc 52/96

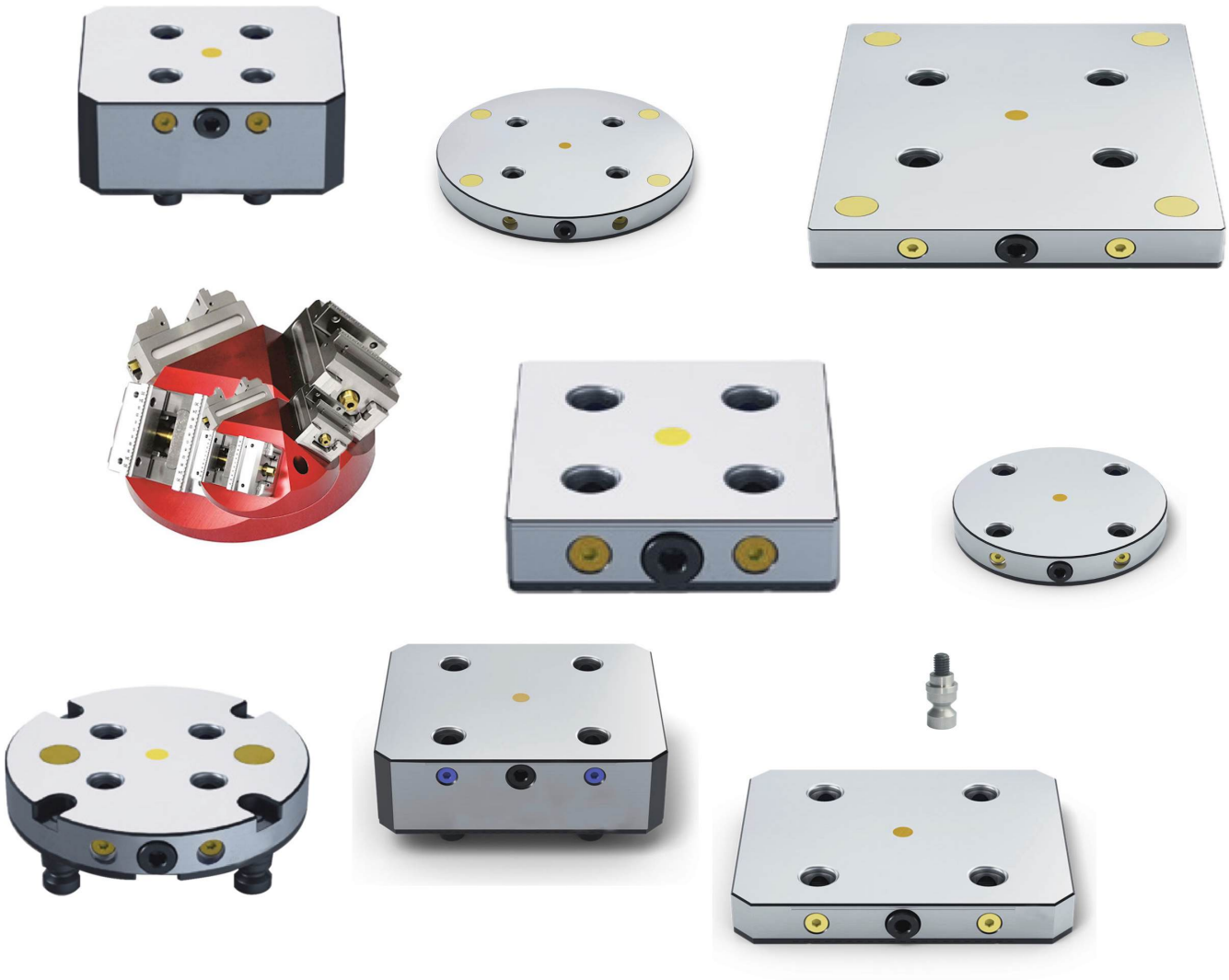

Manual Zero Point Plates

MicroLoc®

5 Axis Workholding Systems

52/96 Manual Zero Point
77/125 Self Centering Vices

Designed and manufactured in the UK by Micron Workholding

MicroLoc is a registered trademark of Micron Workholding Ltd

Micron Workholding Limited, Nene Road, Bicton Industrial Park, Kimbolton, Cambridgeshire PE28 0LF UK
Tel: **+44 (0)1480 861321** Fax: **+44 (0)1480 861515** email: **sales@microloc.com** web: **www.microloc.com**